allume

SolShare

Installation Manual

AUS/NZ VERSION

0925_Installation-Manual_AUS-NZ

This manual is intended for installations in Australia and New Zealand of SolShare model SOLSHARE-3P-35A-04.

It is subject to change. Please check our website at https://allumeenergy.com/document-library for the most up-to-date manual version.

Version	Date released	Updates
A09	19 DEC 24	Initial release.
B02	30 JAN 25	Terminology alignment for certificate number. Minimum cable size change from 0.2 to 0.25 (p20). Minor text edits in Section IV/F (p29). Caution label colour.
C02	19 FEB 25	Updated cable entry gland guidelines Addition of mounting template. Warning label colour.

Hello

Thank you for purchasing a SolShare system. You are supporting the growth of Australian made solar technology.

This installation will likely be different from any other piece of solar technology you have installed in the past. As a result, please follow the guidelines in this manual carefully. Installations that contravene these guidelines are not covered under warranty unless a written exemption from Allume is provided.

SolShare is designed to meet Australian and New Zealand conditions, regulations and codes. This guide provides the general instruction of the installation procedure of SolShare.

If you have questions or feedback on the product or this manual, please contact us and ask for a technical representative.

Australia

+61 3 7038 0686

support@allumeenergy.com.au

List of supplementary documents available online

- SolShare-3P-35A-04 Datasheet
- SolShare pre-installation checklist
- SolShare Systems & SLD Design Guide
- How to set-up/change Wi-Fi Credentials
- SolShare Labelling Advice
- Commissioning App Guide
- SolShare Isolation Box Wiring

Document Library

For the most up to date version of all documents (including this installation manual), scan this QR code or go to https://allumeenergy.com/document-library/

Contents

Commissioning Document

Important:
To be completed during installation and entered to commissioning app.
Please leave a copy of this page in the main switchboard for service purposes.

Installer Name: .....

Electrician License Number: .....

Training Certificate Number: .....

Installer Company: .....

Installation Address: .....

..... Postcode: ..... State .....

SolShare Serial Number: 3P_35A_ ☐ ☐ ☐ ☐

Unit Connection Identifier

SolShare connection	Unit connected (e.g.: Apt, Unit B, Common light & power, No connection)		
	Single-Phase		Three-Phase
L1-1	.....		
L2-1	.....	OR	.....
L3-1	.....		
L1-2	.....		
L2-2	.....	OR	.....
L3-2	.....		
L1-3	.....		
L2-3	.....	OR	.....
L3-3	.....		
L1-4	.....		
L2-4	.....	OR	.....
L3-4	.....		
L1-5	.....		
L2-5	.....	OR	.....
L3-5	.....		

Handling and Safety Instructions

This guide is provided to help the installer understand a typical SolShare installation procedure.

Installations may vary depending on the existing electrical infrastructure and local electrical safety standard. It is the responsibility of the electrician to ensure their installation meets the local electrical safety standard.

During installation, testing and inspection, adherence to all handling and safety instructions is mandatory.

Failure to do so may result in injury, loss of life and/or damage to the equipment.

Safety symbols information

The following safety symbols are used in this document. Familiarise yourself with the symbols and their meaning before installing or operating the system:

Warning:

[redacted]

This symbol denotes a critical safety instruction that must be followed to ensure safety of installer and safe operation of SolShare once commissioned. This box is denoted in green to provide further emphasis.

Caution:

[redacted]

This symbol indicates a potentially critical step, which if not completed correctly, could result in equipment damage or minor to moderate injury.

Important:

[redacted]

This symbol indicates an instruction which will ensure proper operation of SolShare once commissioned or will help with the installation efficiency.

Important safety instructions

Save these instructions:
This manual contains important instructions for SolShare 3P-35A that shall be followed during installation and maintenance of the power division control system.

Warning:
Opening of SolShare must only be performed by a certified electrician.

Warning:
This equipment is connected to multiple sources of supply. Isolate all supplies before working on this equipment. Each input circuit and each output circuit represent a source of supply.

Warning:
The specified shutdown procedure must be followed prior to working on this equipment.

Warning:
This equipment must be permanently earthed. The Earth cable must never be removed from SolShare.

Warning:
This product relies on passive cooling, install in a well-ventilated location in accordance with the mounting instructions.

Warning:
Do not remove SolShare's cover. SolShare's cover does not need to be fully removed during installation. Failure to adhere to these instructions will void your SolShare warranty.

Warning:
SolShare is not compatible with off-grid solar setup and will not enable backup power through a multiple-mode inverter if the grid goes down.

Caution:
HEAVY OBJECT – This product has a weight of approximately 38kg. Un-boxing and mounting the product requires 2 people.

Caution:
Residual Current Devices and Earth Leakage Breakers must not be used as Overcurrent Protection devices in SolShare Output circuits.

Caution:
SolShare will impose a current dependent voltage drop/rise which should be taken into account during design of the installation. Specifications are given in the Technical Data sheet.

Caution:
The unit must be operated according to the technical specification datasheet provided with the unit.

Caution:
Installations may vary depending on the existing electrical infrastructure and local electrical safety standard. It is the responsibility of the electrician to ensure their installation meets the local electrical safety standard.

Important:
Use only copper conductors rated for a minimum of 90 degrees Celsius.

Important:
The symbol ⏚ appears at Earthing points within SolShare equipment. This symbol is also used in the manual.

I/ What's in the box

SolShare Box

Make sure SolShare is intact following transportation. If there are any signs of visible damage, please contact your dealer immediately. Carefully check that all of the components have been supplied. If anything is missing, contact your dealer.

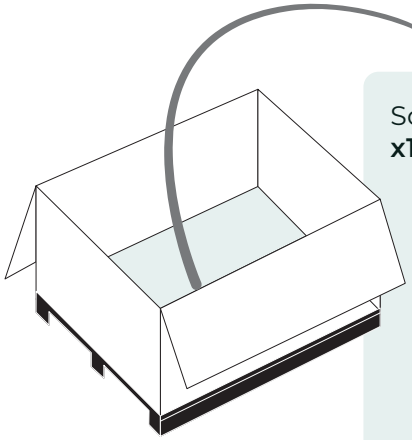

SolShare unit
x1

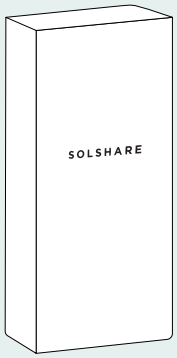

Mounting bracket
x2

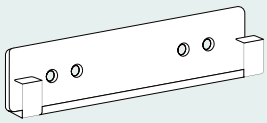

Locking plate
x1

Mounting template
x1

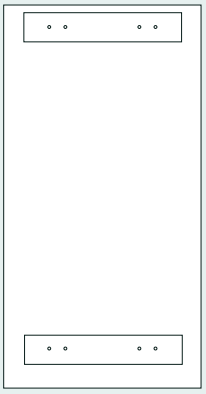

Split-core current transformer with 10m tails
x15

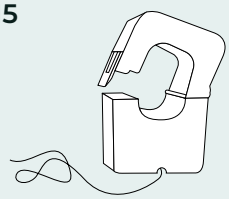

CT connector block
x3

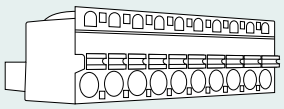

CT connection aid
x1

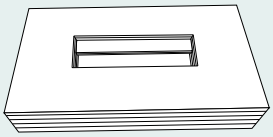

Fastener
x4

Earth screws
x10

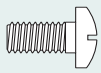

Regional Pack

There will also be a regional pack delivered alongside the SolShare box. The contents of this pack includes components and information specific to your install region.

Label pack

Installation manual

Datasheet

Installation overview

A single SolShare unit can distribute the power generated from a single solar system to up to 15 single-phase or 5 three-phase units (or a combination of the two).

SolShare takes a single three-phase input from a grid-connected solar inverter(s) and connects to each participating unit on the load side of their retail electricity meter at the unit main switchboard.

SolShare requires an isolation box below to ensure SolShare can be safely isolated. The requirements of the isolation box are detailed later in the manual, see section III.

Each solar point of connection should be made through a MCB rated above the maximum inverter current output, called a "Tenancy Main Switch (Inverter supply)" throughout this document.

The typical configuration displayed below may differ from your installation configuration. Please refer to your Project Single Line Diagram (SLD) for the connection and switchgear configuration for your specific project. Guidance on this is covered below and in the supporting SolShare System and SLD Design guidelines document that is available from the Allume Document Library. **A hard copy of the project SLD must be kept on-site at all times and be located in the Main Switchboard (MSB)**.

More information about labelling can be found in the SolShare Labelling Advice document.

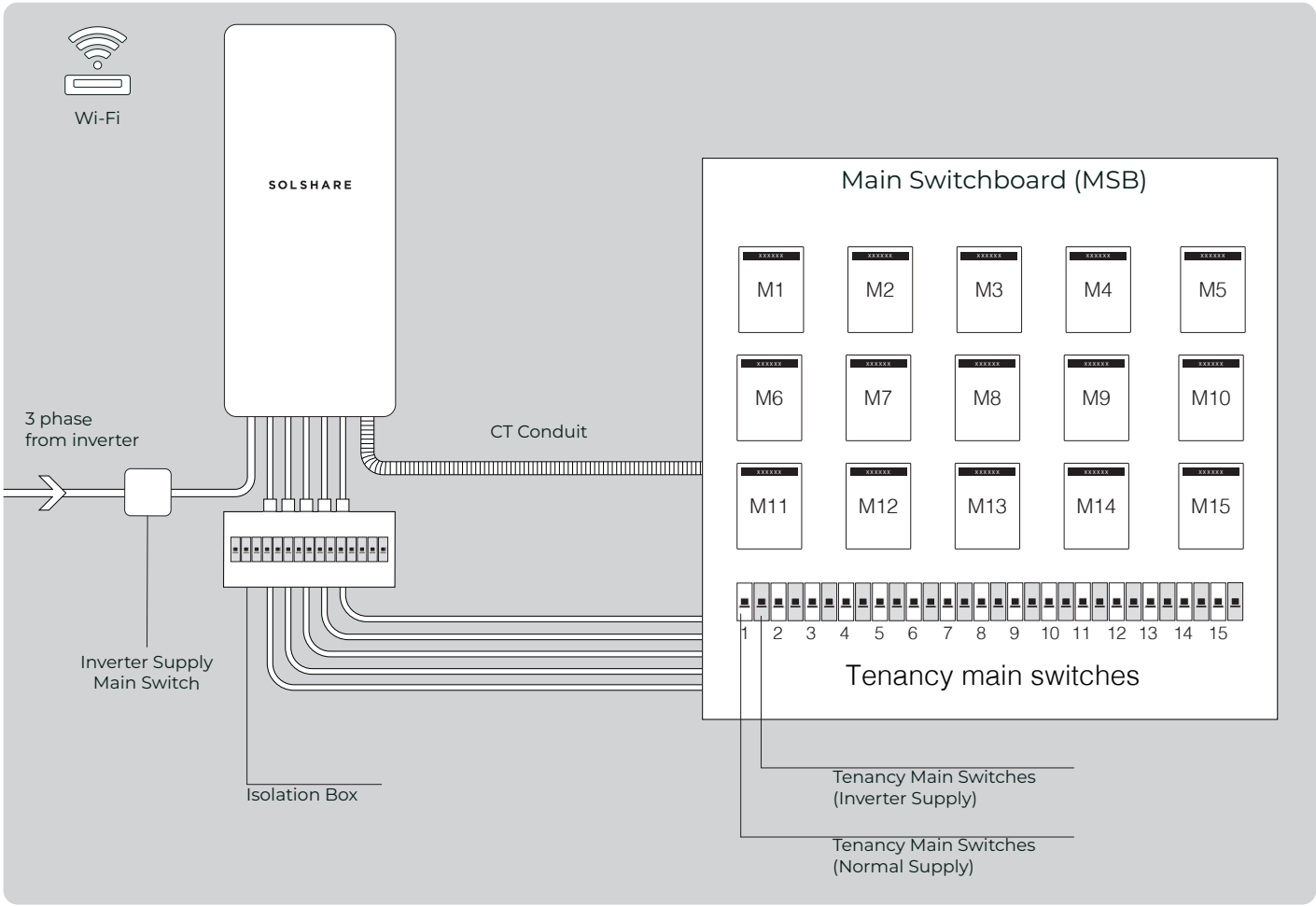

Warning:
The neutral for SolShare must be wired directly to the main neutral bar inside the main switchboard, i.e. at the Main Earth Neutral (MEN) link at the building's main switchboard. The neutral must not be connected to an individual tenancy's neutral.

II/ Mounting SolShare

A. Installation site selection

To minimise cabling required, SolShare should be mounted as close to the main switchboard as possible.

The following mounting requirements must be met when selecting the install location. Failure to do so will void warranty.

Minimum clearances, shown below, are required for installation and maintenance of SolShare. **Failure to adhere to minimum clearances will void warranty.**

NOTE: The highlighted minimum clearances are **mandatory** for air flow and service.

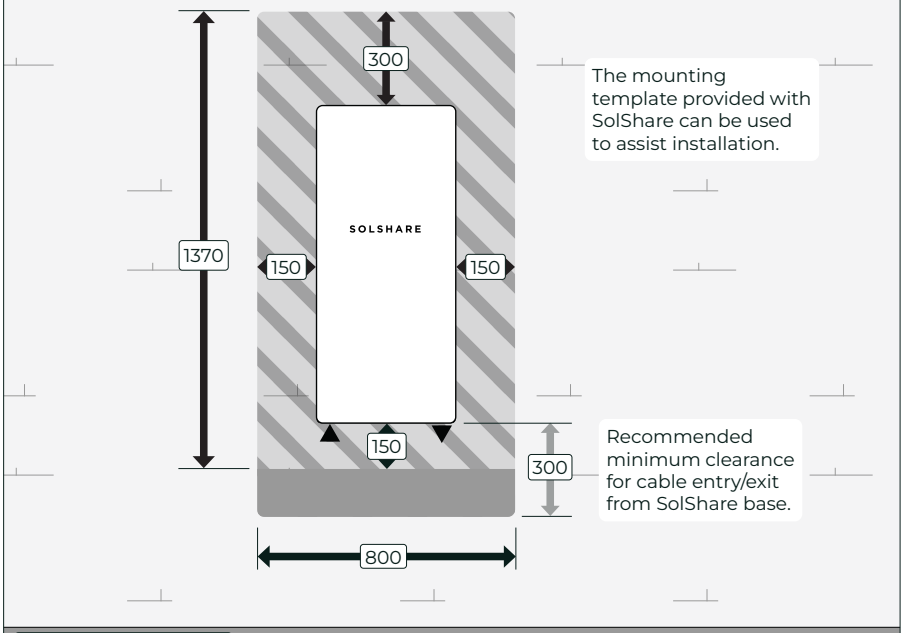

The mounting template provided with SolShare can be used to assist installation.

Recommended minimum clearance for cable entry/exit from SolShare base.

All dimensions in mm.

NOT TO SCALE

SolShare dimensions (H x W x D):
920 x 485 x 270

- Install in a well ventilated area.
- Install a shade cover over SolShare units when installed outdoors in direct sunlight or when in the path of debris (e.g. under a tree with falling leaves).

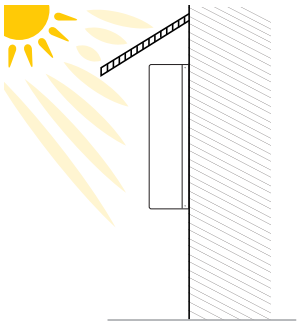

Install in an easy to observe and operate location
***dimensions in mm**

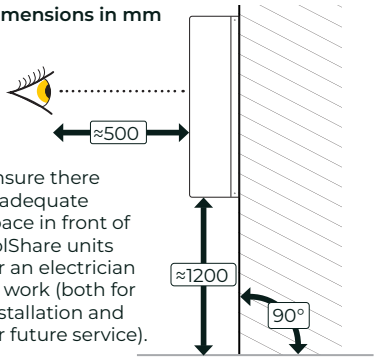

Ensure there is adequate space in front of SolShare units for an electrician to work (both for installation and for future service).

Mount vertically

Internet communications

A 2.4GHz Wi-Fi network must be available at the site to enable commissioning and ongoing monitoring.

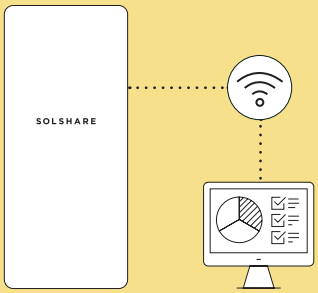

NOTE: Where possible, do not install SolShare below a cable tray - this may affect SolShare's ability to connect reliably with the Wi-Fi at site.

Environmental boundaries

Max ambient temperature:
50°C (+122°F)

Min ambient temperature:
-10°C (-14°F)

Relative humidity:
0-90%

Do not mount SolShare units on or near flammable material or gases

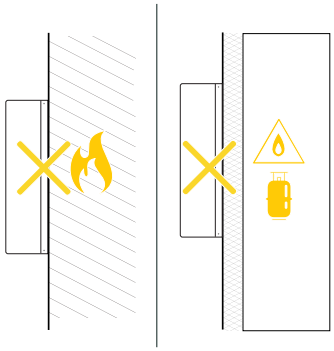

B. Installation

Follow the steps below to mount the brackets and enclosure:

Important:
The mounting wall and fastener selection is at the discretion of the installer. Weight rating fasteners should be rated to at least 30kg of shear force per fastener.

It is the installer's responsibility for appropriate site selection and bracket fastener choice.

1

Firmly secure the mounting brackets to the wall for installation. It is recommended to use the provided fasteners to attach the brackets into a suitable stone or masonry wall. If another wall material has been chosen for installation, please use suitable fasteners with at least 30kg shear force per fastener.

Important:
A mounting template is provided with SolShare to assist with this step.

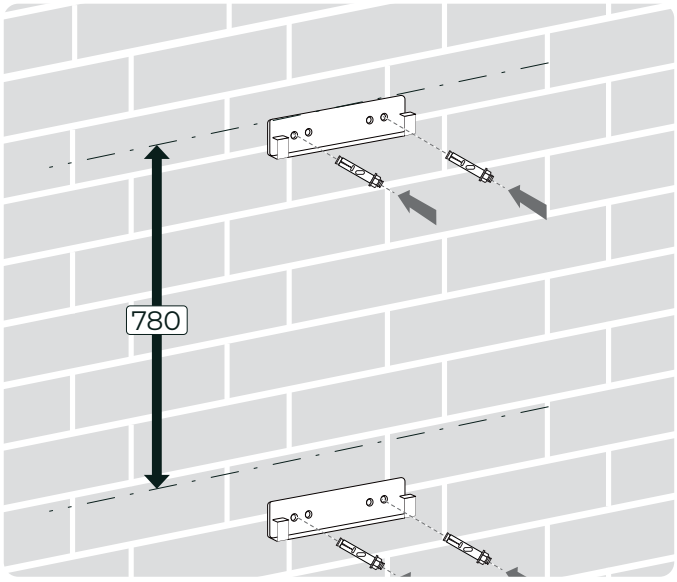

NOTE: Ensure minimum clearances are achievable (refer previous page).

2

Lift SolShare onto the mounting brackets as directed in the diagram. Check both top and bottom brackets are aligned and secured.

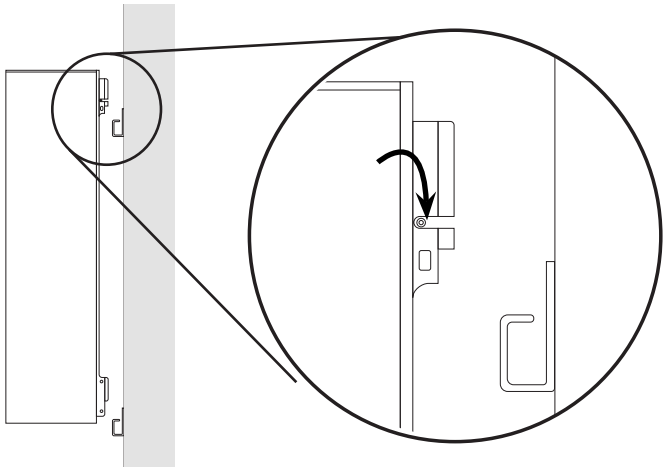

3

Insert the locking bar through the mounting bracket as shown.

If required, a customer supplied padlock can be fitted to the locking bar to secure the SolShare to the wall.

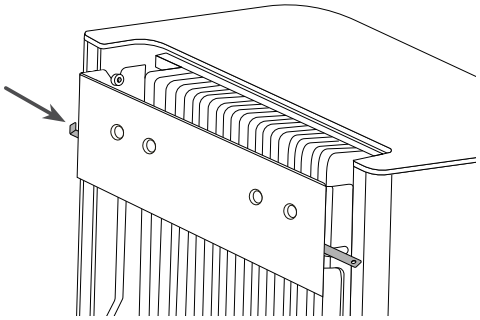

4

Ensure SolShare is securely fastened to the wall and locked into place.

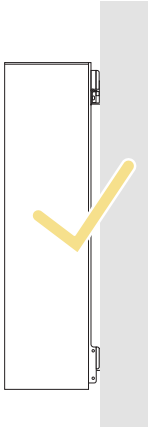

III/ Electrical connection

Lift up cover into the Connection Position to reveal the lower section of SolShare, where the electrical connections are made.

1

SolShare as you find it, with cover in the Closed Position. Unscrew the 4 screws on the underside of SolShare to allow access to connection terminals. Retain screws to replace later.

Cover in **Closed Position**

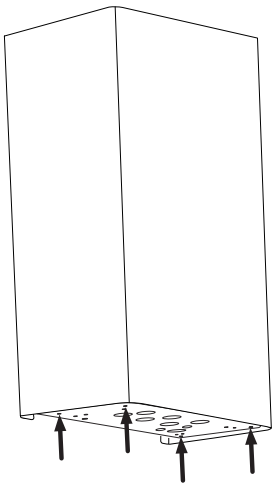

2

To reveal the lower section, slide cover up about 15cm. Whilst sliding cover upwards, pull cover gently towards you. This will ensure it finds the locking slot. This cover position is called the Connection Position.

Cover in **Connection Position**

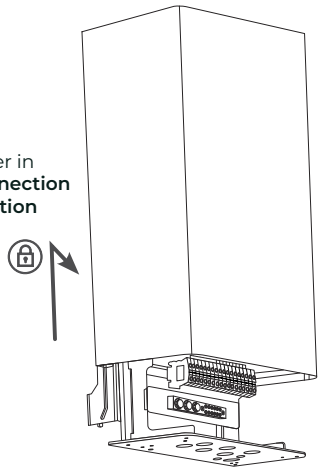

Important:
The cover should lock into place when it's pulled up properly. Before beginning wiring, ensure cover is locked open in the Connection Position by pulling down firmly.

To bring cover back to the Closed Position, lift cover upwards and away from you, then allow to slide down back into place.

Caution:
Risk of crush hazard if cover dislodged while in the Connection Position.

The AC cables

Choose appropriately gauged cables per solar system size. All input and output cables should be rated to total generation capacity of inverter/s.

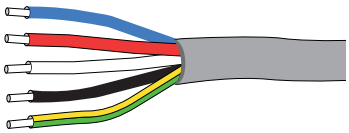

Warning:
SolShare's IP56 rating must be maintained for the installation environment. Suitable weatherproofing to enable this should be installed for all cable entries into SolShare.

Panel thickness: 4mm | Hole diameter: 32mm

The primary SolShare install interfaces are as follows:

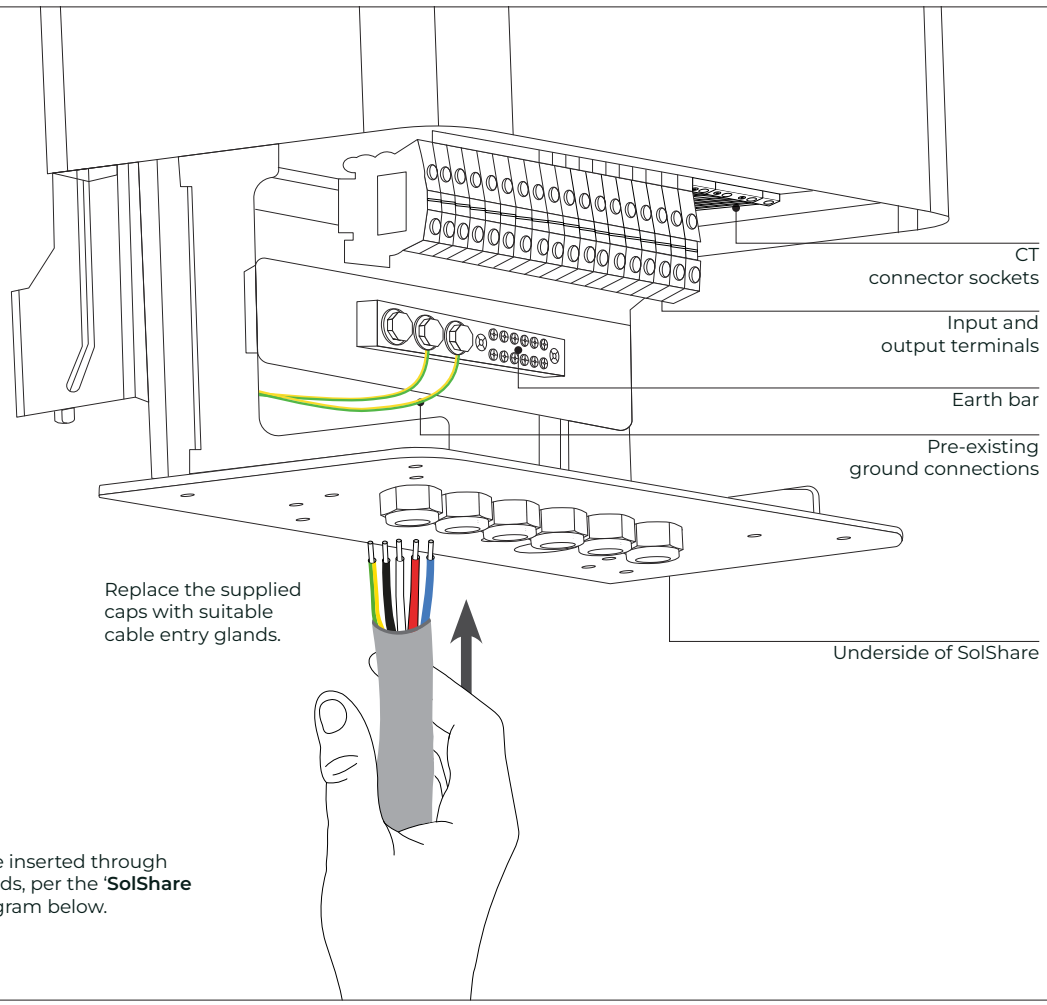

The cables should be inserted through the appropriate glands, per the '**SolShare underside view**' diagram below.

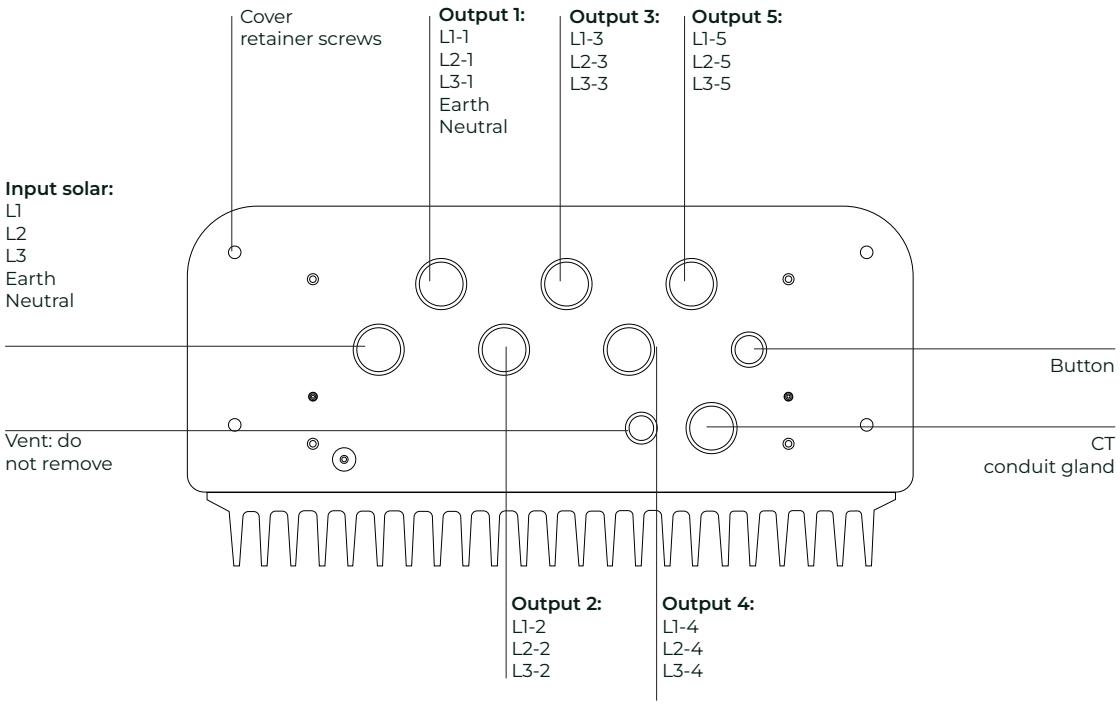

SolShare underside view
Each output cable entry corresponds to an output of 3 single-phase tenancies or 1 three-phase tenancy. The leftmost cable entry corresponds to the solar input.

A. Input connection

All wiring is conducted on the AC side of the inverter. SolShare requires a three-phase, grid-connected inverter to be used in the PV installation. The solar input cables must come from an Inverter Supply Main Switch, ideally located in an accessible location from the main switchboard.

To wire the input cables into SolShare, the following steps should be taken:

1

Measure out the input cables and cut to appropriate length.

2

Strip cable sheath back by approximately 100mm.

3

Select appropriate cable entry glands for the installation environment and use these to replace the caps provided with SolShare. Insert the input cables into SolShare via this cable entry gland.

4

Connect earth and neutral to their respective connection points. Use two of the earth screws provided with SolShare to secure the input earth connection to the earth bar.

5

Connect phase cables per the diagram below.

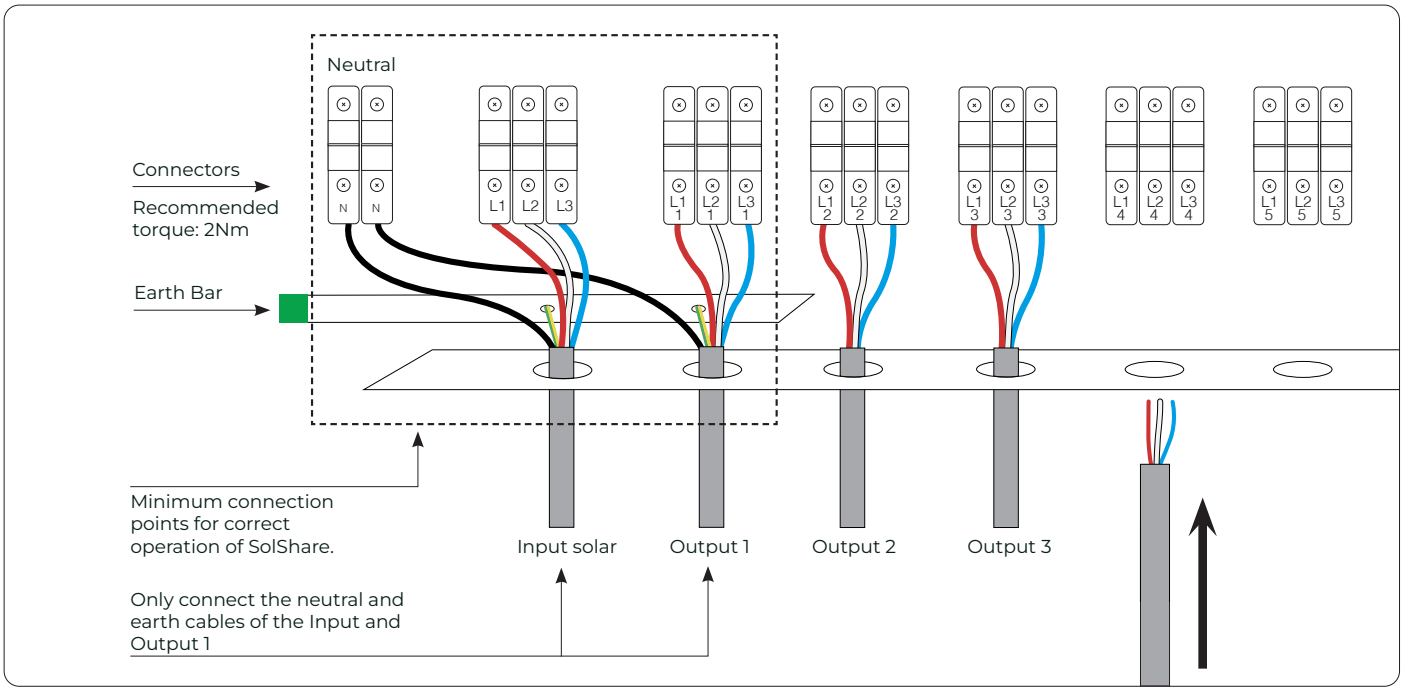

Important:
Any unused conductors in multicore cables should be safely terminated within SolShare. This includes any unused earth and/or neutral conductors for Outputs 2-5.

Important:
The Inverter gets its voltage reference through SolShare. Therefore, it does not require a separate grid connection that bypasses SolShare. Connections L1-1, L2-1, L3-1 are closed to the grid prior to commissioning.

B. Output connections

Please refer to your Project Single Line Diagram (SLD) on where to connect SolShare to the main switchboard.

Your project Single Line Diagram (SLD) should be designed in accordance with the SolShare System, SLD Design Guidelines, and relevant standards and codes. If no project SLD exists, please contact the project owner or system design engineer.

To successfully connect solar to each unit/apartment:

- SolShare output terminals are to be connected to each unit's Tenancy Main Switch (Inverter Supply), via an Isolation Box.
- To comply with relevant regulations and standards, the Isolation Box shall provide automatic air gap isolation per SolShare output.
- To correctly trace SolShare outputs through the installation, and to support maintenance, clearly label each SolShare output cable and check for continuity.

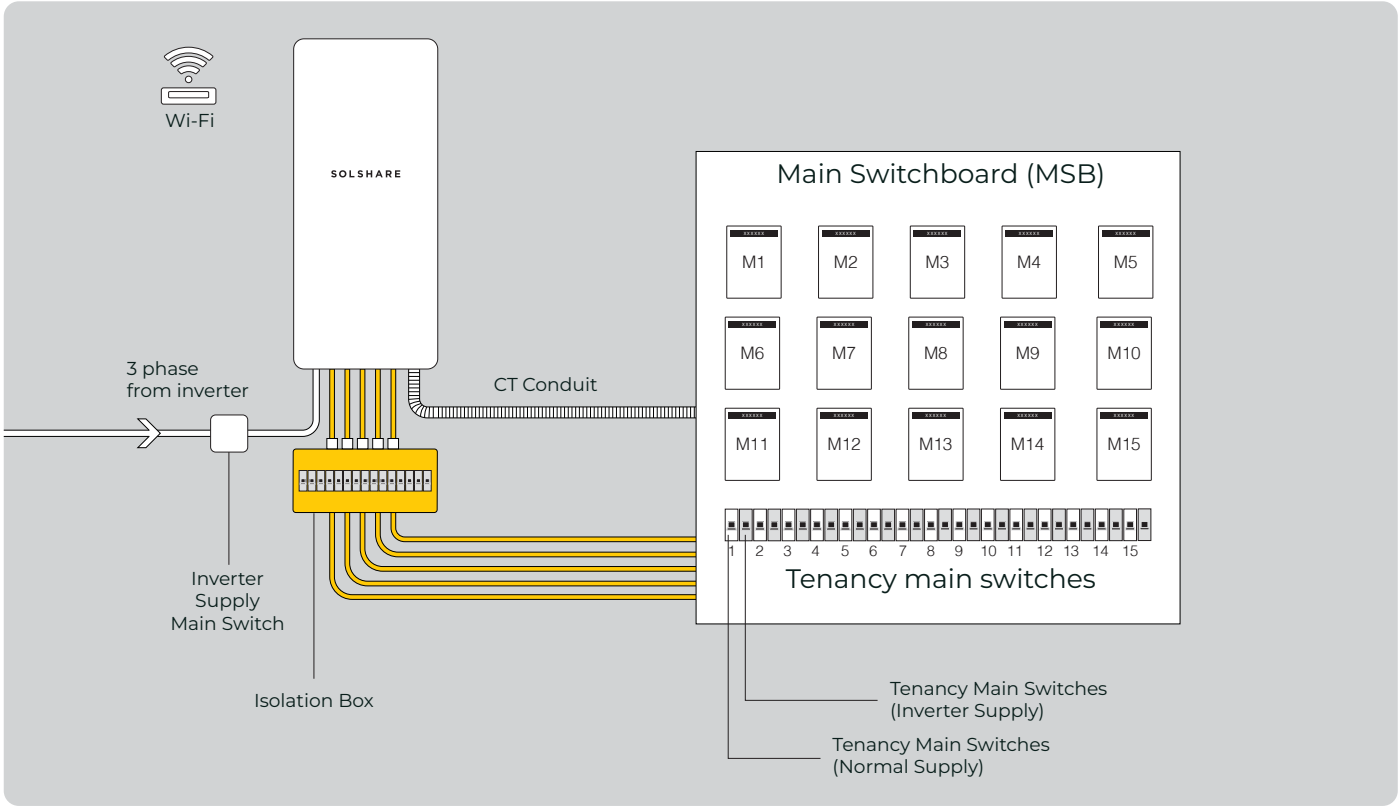

Install the Isolation Box and connect SolShare outputs

Scan this QR code to access the Isolation Box Wiring Document

1

Secure the Isolation Box to the wall; mounting it close to the base of SolShare but with enough distance for wiring and maintenance. Ensure it will be protected from the elements.

2

Install and wire the air gap isolation components into the Isolation Box. This section steps through one possible implementation of the Isolation Box. For more details on this option, please refer to the Isolation Box Wiring Guidelines via the QR code.

a. Mount one set of 1A MCBs and 240V AC 1P Normally open contactors (rated for the inverter's maximum output current) side by side on the DIN rail.

b. Connect the control coil and neutral.

c. Label each contactor and MCB.

d. Repeat until there is one wired contactor set per SolShare output.

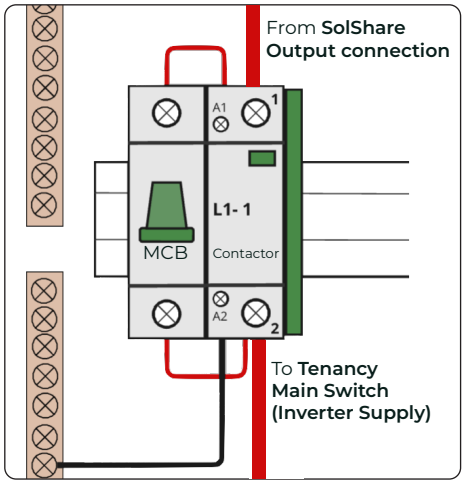

3

Run cables between SolShare output terminals and the Isolation Box, cut to length, label, and strip cable ends.

NOTE: The Neutral and Earth cables from SolShare will pass through to the Main Switchboard.

4

Within SolShare: terminate the cables into the SolShare output terminals.

5

Within the Isolation Box: terminate each SolShare output cable into the corresponding contactor terminal labelled '1'. Confirm polarity and phase alignment is correct.

6

Inspect all connections for security and insulation.

Wiring from the Isolation Box to the solar point of connection, per unit

1

At the Main Switchboard, ensure the 'Tenancy Main Switch (Inverter Supply)' and 'Tenancy Main Switch (Normal Supply)' breakers are correctly installed for each unit.

The Inverter Supply switches:

a. Must be rated above the maximum inverter current output.

b. Must be on the load side of the unit meter.

c. Must be clearly labelled.

d. Should be mounted adjacent to, or very close to, the corresponding Tenancy Main Switch (Normal Supply) breaker in the main switchboard (otherwise the alternate location must be clearly labelled).

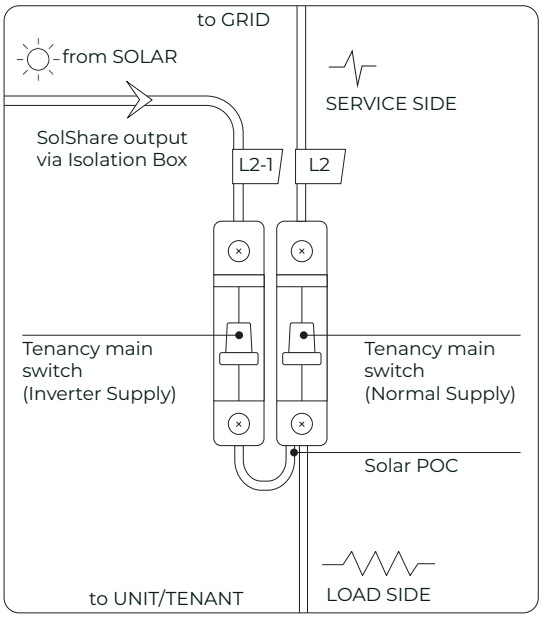

2

Run cables between the Isolation Box and the Inverter Supply switches, cut to length, label, and strip cable ends.

3

Terminate the cables in the Isolation Box, and clearly label the cables so the SolShare output number can be traced through the install.

4

At the Main Switchboard, create the solar point of connection (POC) by connecting the SolShare output wire to the unit's Tenancy Main Switch (Inverter Supply):

a. Refer to your SLD and select the SolShare output that is to be connected to the unit, ensure they are the same phase.

b. Terminate the SolShare cable in the input terminal of the unit's Inverter Supply switch.

c. Wire the unit's Inverter Supply switch output to the output of the unit's Normal Supply switch.

d. Repeat for all solar connections required for the install.

5

Double-check all connections, perform a continuity test, and label each switch for future reference.

6

Complete the 'Unit Connected' column of the commissioning document on page 5, confirming which SolShare output is connected to which unit.

Warning:
Ensure the phase of the solar supply correctly matches the phase of the unit's supply from the grid.

Additional circuit breakers must be sized to perform overload protection for SolShare output cables.

The solar system max output must be less than the main circuit breaker rating of every connected unit.

The neutral for SolShare must be wired directly to the main neutral bar inside the main switchboard, i.e. at the Main Earth Neutral link at the building's main switchboard.

Point of connection of solar should be on the load side of tenancy main switch unless specified otherwise by your Project SLD.

Important:
Check the order of the SolShare outputs carefully. The SolShare terminal block is configured to wire in the order L1-1, L2-1, L3-1, L1-2, L2-2, L3-2, L1-3, ... etc. Ensure the connections from the Tenancy Main Switches (Inverter Supply) via the SolShare Isolation Box (Grid) are connected in this order. Ensure switches are labelled clearly and logically.

Important:
It is recommended to label both ends of each cable with the appropriate tenancy name (e.g. Unit 21) and SolShare output name (e.g. L1-1 or L3-4, etc.) to ensure the correct cable is wired into the correct tenancy in the main switchboard.

Important:
For maintenance and troubleshooting purposes, it is recommended to write the tenancy names corresponding to each output on the bottom plate of each SolShare unit (with permanent marker).

Warning:
There must be one input neutral and ground connection from inverter to SolShare.

Only one output neutral and ground must be wired out of SolShare to the neutral bar and earth bar inside the Isolation Box. This, in turn, must be wired to the main neutral bar and main earth bar (i.e. Main Earth Neutral link) located at the building's main switchboard.

C. Running current transformer tails

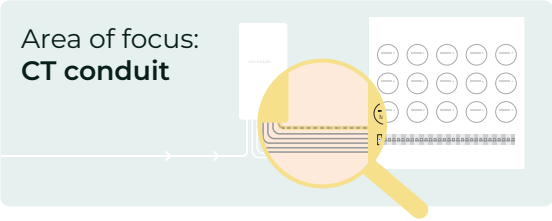

1

Run CT conduit from SolShare to main switchboard (the CT conduit gland is the pre-installed CT conduit gland on the underside of SolShare - see the underside view diagram on p. 13 to ascertain where the CT conduit gland is).

2

Look for labels on current transformers and current transformer tails. Ensure these match the corresponding tenancy.

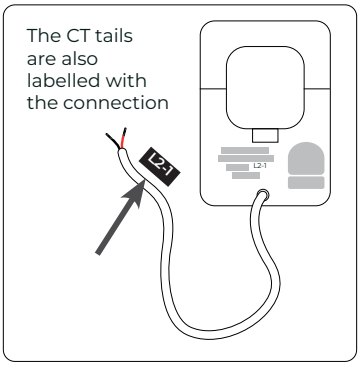

3

Run tails of CTs from main switchboard to SolShare through conduit.

Important:
The SolShare will come with 15, 120A CTs. Please note that only one type of CT can be used on each SolShare, i.e., you cannot use 4 x 75A CTs and 7 x 120A CTs on the same SolShare - you should use 11 x 120A CTs instead.

Important:
If you are extending CT tails, this can be done for each CT separately up to the limits described in the advisory on the CT box.

When extending CT tails using shielded cable, shielding must be grounded. This can be done at SolShare using the SolShare grounding bar.

Recommended parts:

- Butt splice connector (appropriate size for cable).
- Shielded, twisted pair cable, minimum 0.25mm² (24 AWG) size, rated for at least 400V or separately sheathed, and compliant with AS/NZS 3000 (Australia and New Zealand), and any other relevant standards and regulations.

CT shield grounding guidance within SolShare:

- Use splicing connectors to group CT shield grounding conductors.
- Minimise length of exposed grounding wire.
- Use cable-ties to provide mechanical strain relief and maintain isolation to power conductors.
- Use insulated cable to extend earthing connection

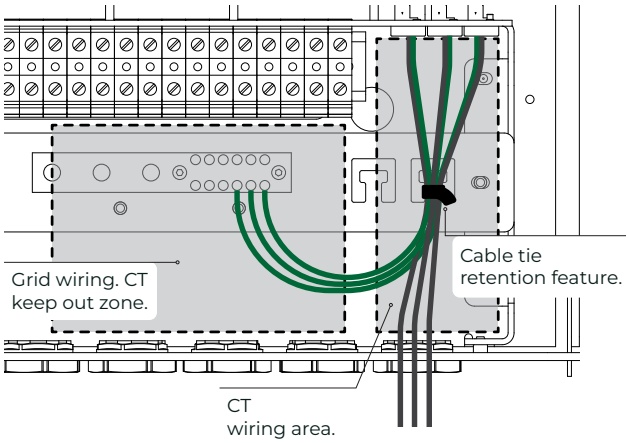

Additional tips:

- Ensure there is good electrical contact between tail/extension(s).
- Ensure shielding is not compromised along the extension(s) and tails (e.g., avoid the use of sharp objects like metal cable ties on these tails/wires.
- Label the extended tail with the same SolShare output name (e.g., L2-1) as is written on the original part of the tail and the CT. This will help to ensure the correct CT tail is inserted into the correct terminal on SolShare during installation.

Current transformers to SolShare connections

Wiring tails to SolShare:

1

Connect the CT cabling to the CT connector block, as per the diagram to the right. To do this:

a. Push the orange tab in and hold.

b. Feed the CT cable into the hole.

c. Once inserted, release the orange tab.

d. Confirm cable is secure by giving it a gentle tug.

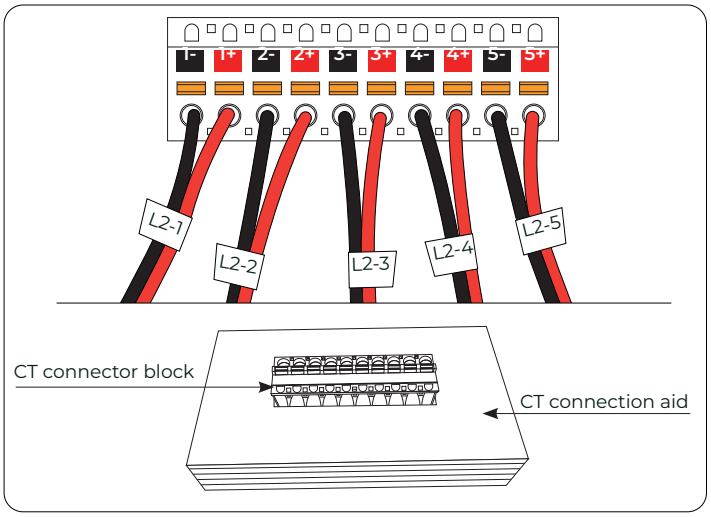

2

Repeat for all CT cables of the L1 phase.

3

Repeat steps 1 & 2 for L2 and L3 phase connector blocks.

4

Plug each CT connector block into the corresponding socket of SolShare.

Important:
SolShare has come with a CT connection aid. Place the CT connector into the connection aid to help with the termination of the CT tails.

Important:
Make sure colours and orientation of connectors are identical to the image above. To ensure you are positioning them correctly, check that the orange tabs are above your plugged in cables, and labels read as above.

Important:
Ensure appropriate weatherproofing is used for CT tail entry into SolShare.

Current transformer clipping

Clipping the current transformers onto the service side cable:

1

Match the labelled CTs with their corresponding labelled service supply cable.

2

Confirm correct polarity of the CT by ensuring the arrow on the CT head matches the current flow direction on the service supply cable.

3

Clip CT over service supply cable.

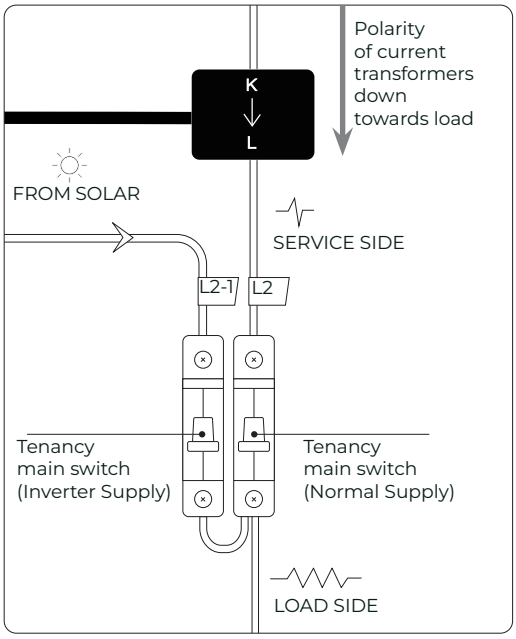

Important:
Make sure that each CT is clipped to the corresponding unit.

Important:
The CT must be connected on the **service** side of the point of connection of solar supply, as per diagram.

D. Labelling

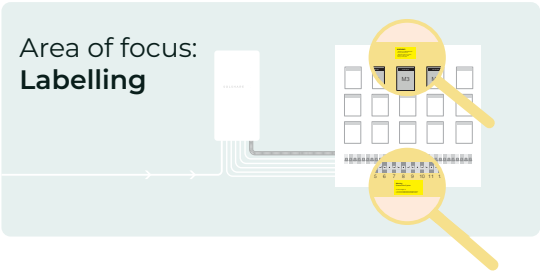

SolShare comes with a Label Pack for you to use where appropriate. Other labelling will also be required based on your installation and local requirements. For more information, refer to the SolShare Labelling Advice document.

The graphic below provides an indication of where the labels should be placed. Scan the QR code for more detailed guidance and additional labelling requirements.

Additionally, please leave a copy of the Project SLD in the main switchboard on site to provide guidance to any other electrician working on the switchboard.

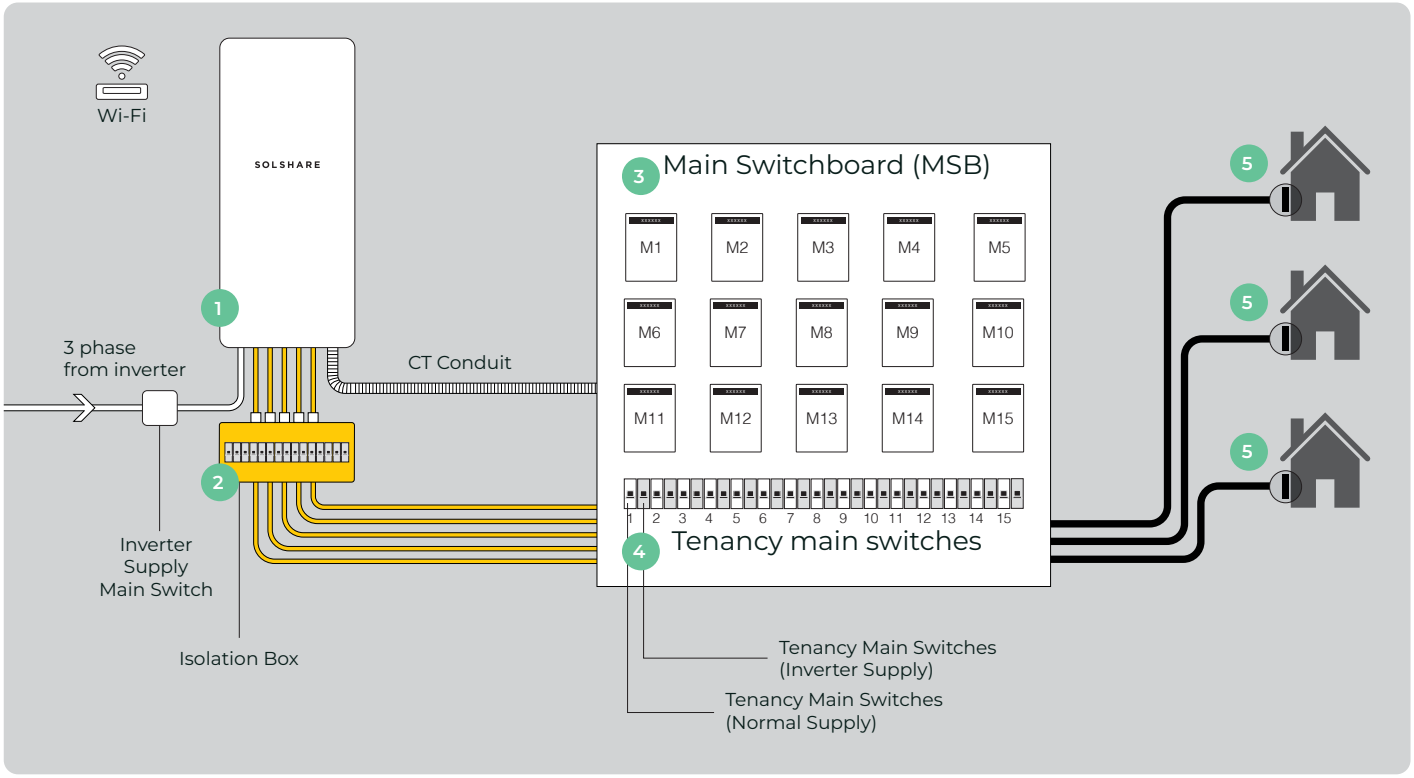

Example SolShare labels for the site

Please scan this QR code to access Allume's detailed labelling guidance document.

IV/ Commissioning

A. Check phase wiring before power on

Caution:
Grid connections must be wired to the correct phase before applying voltage to SolShare. Failure to do so could result in a phase-to-phase condition which may damage SolShare. This will not be covered by SolShare warranty.

Prior to turning on SolShare isolators: Ensure the output wiring is correct and the voltage phase is connected per the SLD and terminal labelling.

Confirm there are no phase-to-phase wiring errors:

1

Test phase wiring at input to contactor in Isolation Box (Test Point 1).

2

Test continuity between output of contactor in Isolation Box and input of SolShare terminal block to ensure 1 to 1 connection (Test Points 2 & 3).

If tests 1 and 2 are as expected, turn on SolShare isolators.

3

Test phase wiring at input to SolShare output terminal blocks (test point 3).

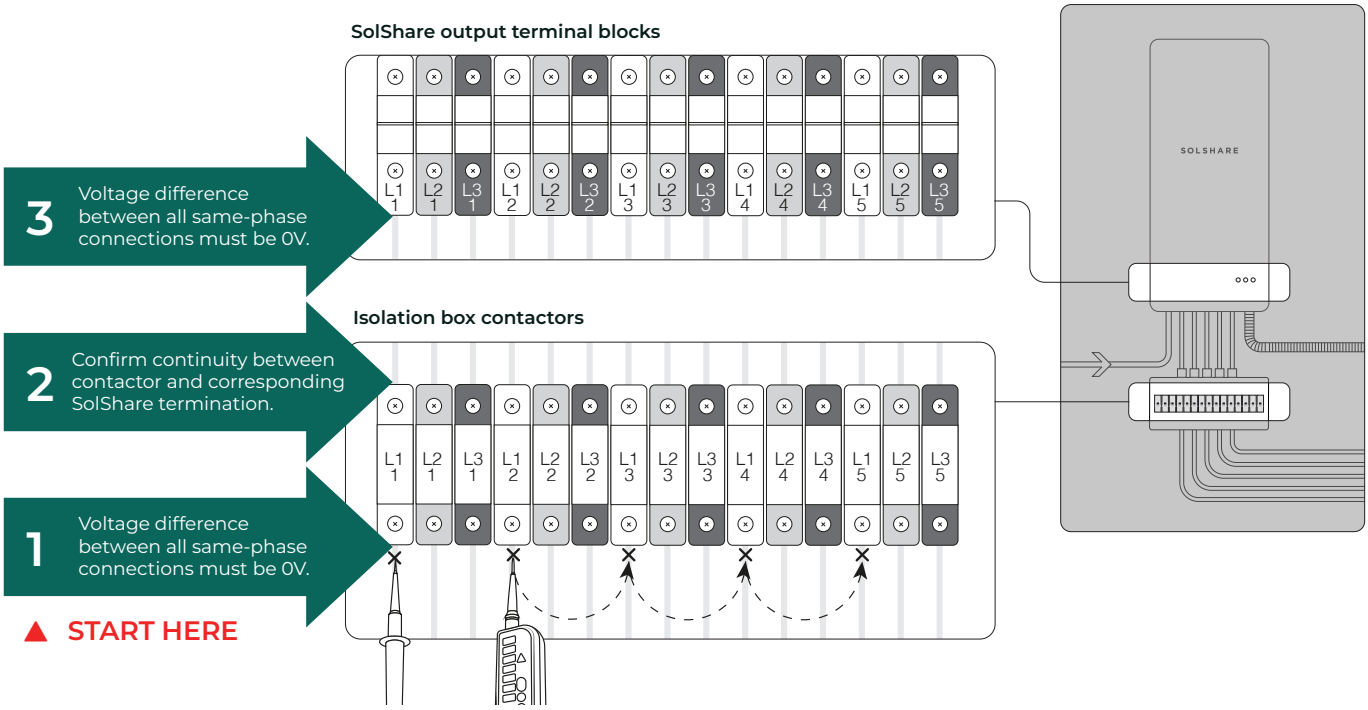

Additional check items

- ☐ There is no phase-to-phase miswiring (all phase checks read 0V).
- ☐ SolShare has **one input neutral and earth connection**, from the inverter to SolShare.
- ☐ Only one output neutral and earth is wired out of SolShare to the main neutral bar and main earth bar located in the main switchboard, via the neutral bar and earth bar inside the Isolation Box.
- ☐ The point of connection is **load side**, not service side.
- ☐ Ensure the CT is clipped on the Service side of the Tenancy Main Switch (Normal Supply) for each unit.
- ☐ **Polarity** of each current transformer is correct (arrow points towards unit load side).
- ☐ There is a **2.4GHz Wi-Fi internet connection** available on site to successfully commission a SolShare and provide ongoing monitoring of SolShare data.
- ☐ The contactors and AC cables are well terminated (they pass visual inspection and pull test).
- ☐ The inverter is commissioned (the inverter must be commissioned before SolShare can be commissioned).
- ☐ Check all CTs and output cables are connected as per their labels.
- ☐ Record connection information on commissioning document (page 6).

B. Preparing SolShare

Close and secure the SolShare cover

1

Pull down cover of SolShare into the Closed Position.

2

Fasten the cover shut by replacing the four screws on the underside of SolShare that were removed in section III/A.1.

Maximum torque for cover fasteners is 1.5Nm.

Power on SolShare

1

Turn on Inverter AC Isolator located next to inverter.

2

Turn on Inverter Supply Main Switch.

3

Ensure Main Switches (Normal Supply) are on.

4

Turn on Main Switches (Inverter Supply).

5

Ensure isolation switches in the isolation box are on.

6

You will see SolShare's Power LED turn on and flash yellow. This means SolShare is powered on but has not yet completed the commissioning process. To complete commissioning, SolShare must be connected to Wi-Fi.

If more information is needed, consult the SolShare LED States table in Appendix A.

C. Commission inverter

The inverter must be commissioned prior to SolShare commissioning.

At this stage, the inverter will be powered on and can be commissioned as it receives its grid reference through the SolShare via the first connection of each phase (L1, L2, & L3).

D. Connecting SolShare to Wi-Fi

1

Press the green button on the bottom of SolShare to put SolShare into **Wi-Fi access point mode**.

The Wi-Fi LED on the front of SolShare will flash blue.

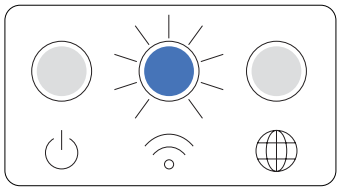

2

Configure new Wi-Fi network settings (must be done within 5 mins of pressing button).

Using your phone or laptop (device), look at the list of available Wi-Fi networks. After about 1 minute, the SolShare serial number should appear as an available SSID/Wi-Fi network name (similar to the one shown in the image).

Connect your device to this SolShare Wi-Fi network.

NOTE: You have 5 minutes to connect a device before SolShare exits Wi-Fi access point mode and reconnects to the last Wi-Fi network it connected to.

NOTE: Your device may provide a pop up saying “no internet connection through this network”. Click accept and continue.

3

Open an internet browser on the same device that is connected to SolShare’s Wi-Fi network and navigate to:

192.168.4.1

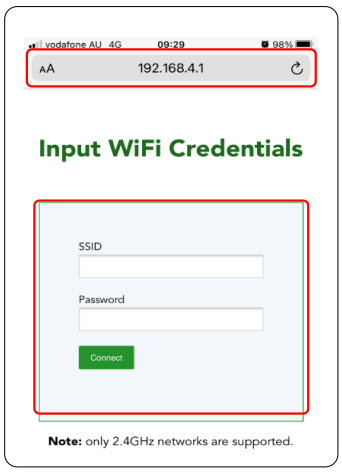

4

When presented with this page, enter the new details of the site Wi-Fi network (SSID) that you want SolShare to connect to.

Please note that SSID refers to the Wi-Fi network name.

Click the green Connect button.

5

After SolShare has connected to the new Wi-Fi network, the Wi-Fi LED on the front of SolShare will turn a solid blue (usually within 30 seconds). The internet LED will also turn blue if there is a strong internet connection.

If the Wi-Fi LED on the front of SolShare still flashes blue after 30 seconds, please go to Part 1 of the Troubleshooting section in Appendix B.

If the Wi-Fi LED on the front of SolShare is not on at all, please go to Part 2 of the Troubleshooting section in Appendix B.

If the Wi-Fi LED on the front of SolShare is blue, but the Internet LED is yellow, please go to Part 3 of the Troubleshooting section in Appendix B.

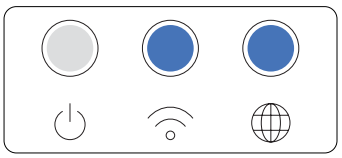

NOTE: You have 30 minutes to successfully connect to a Wi-Fi network after completing step 2 before SolShare will exit **Wi-Fi access point mode** and reconnect to the last Wi-Fi network it was connected to.

E. Commissioning SolShare

Important:

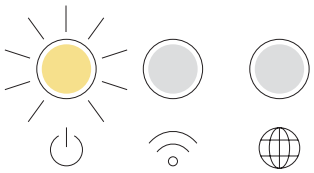

- Prior to starting the commissioning process, check the **Power LED** on SolShare. If it is blue, there is a firmware update in progress. Do not power down SolShare or start the commissioning process while SolShare is updating its firmware. The SolShare is ready when the **Power LED** is flashing yellow.
- Ensure that SolShare is connected to a Wi-Fi network (indicated by a blue **Wi-Fi LED**) with a strong internet connection (indicated by a blue **Internet LED**) prior to starting the commissioning process.
- SolShare requires a fully operational inverter to complete commissioning. Please make sure that the inverter has been commissioned prior to starting the commissioning process for SolShare.

Warning:
Your Training Certificate Number (generated and provided to you upon completion of SolShare Installation Training) is required to commission SolShare. Warranty will be void if installation is carried out without completing Allume training modules.

1

Ensure you have an installer login for the SolShare Commissioning App, and your Training Certificate Number (both of these can be generated on successful completion of the online SolShare Installer Training).

2

To commission SolShare, scan the QR code on the right side of SolShare or go to https://commissioning.allumeenergy.com to access the SolShare Commissioning App.

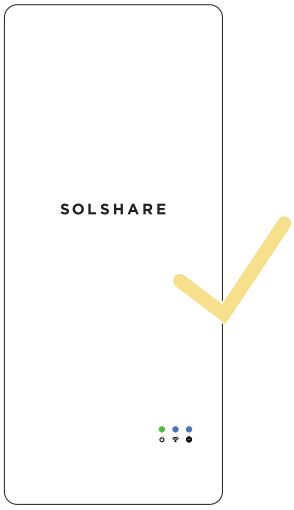

3

Follow the steps in the Commissioning App to commission each SolShare.

If needed, the Commissioning App Guide provides more information on the commissioning process. Scan the QR code to the right of this page to access the Commissioning App Guide.

4

Once the commissioning process has been completed successfully, the **Power LED** will be green, and the **Wi-Fi LED** and **Internet LED** will be blue as shown in the graphic to the right. Consult the table about SolShare's LED states in Appendix A for more information.

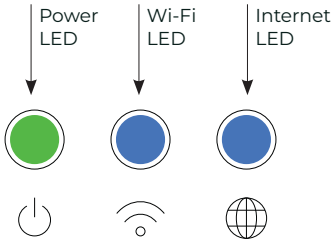

If you experience issues with the commissioning process, please contact Allume Technical Support:

Australia
Tel: +61 3 7038 0686
Email: support@allumeenergy.com.au

Scan this QR code for the latest SolShare Commissioning Guide App.

F. SolCentre monitoring portal

The SolCentre monitoring portal allows asset managers to view and manage each connected SolShare. It also provides access for individual tenancies to view their own solar and consumption data.

SolCentre permissions are managed and restricted via logins and invitation-only access.

Each SolShare can be added, viewed and managed in SolCentre once SolShare has been commissioned and is successfully connected to the grid, a fully operating solar system, and stable Wi-Fi.

SolCentre access for Asset Manager (whole site)

You, the Allume accredited installer, can invite the designated asset manager(s) through the Commissioning App in one of two ways:

a. As one of the lasts steps in the SolShare commissioning process, you will be asked to invite asset manager(s) by entering their email address.

b. Within the Commissioning App, any time after SolShare has been commissioned, via: Reconfigure a SolShare → Access Control.

The asset manager will then automatically receive the invitation via email.

Please note:

- Scan this QR code for the detailed SolCentre access process.
- Ensure the email address of the asset manager(s) are correct before they are entered.
- Asset managers will need to create an account by registering on SolCentre Monitoring portal before accepting the invitation, if they haven't created one already.
- Once they have set up their account and accepted the invitation, an asset manager can then invite other asset managers through the SolCentre portal.

Scan this QR code for the detailed SolCentre access process.

SolCentre access for tenants (individual tenancy data only)

Tenants can register for the SolCentre portal once their tenancy has been mapped to the correct SolShare output(s).

Please note:

- Tenants will only be able to access solar and load data for their own tenancy.
- The portal access is provided to one (1) email address per tenancy.

Appendix A: SolShare LED States

LED Status		Meaning	Notes / Actions
Power LED			
Green		SolShare is powered on, has been commissioned successfully, and the SolShare is distributing solar normally.	
Blue		SolShare is powered on and Is performing a firmware update.	**Do not power off SolShare while it is performing a firmware update.**
Yellow flashing	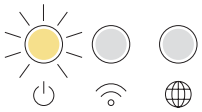	SolShare is powered on and has not yet completed the commissioning process.	
Yellow or Red	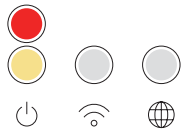	SolShare is powered on and is experiencing a fault and/or the SolShare is not distributing solar.	Consult the SolShare Commissioning App. It is normal to see the yellow light during non-sunlight hours.
No lights on		SolShare is not powered on.	Check SolShare Maintenance Isolators (Grid) and Tenancy Main Switches (Inverter Supply) are not switched off.
Wi-Fi LED			
Blue		SolShare is connected to a Wi-Fi network.	
Blue flashing	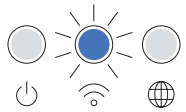	SolShare is in **Wi-Fi access point mode.**	Follow the steps in Section IV Commissioning / Part A to connect SolShare to a Wi-Fi network.
Yellow		SolShare is not connected to a Wi-Fi network and is not in Wi-Fi access point mode.	Ensure the Wi-Fi router is powered on and within range of SolShare. Check the Wi-Fi SSID and password and re-enter the credentials if they were incorrect by following the steps in Section IV Commissioning / Part A to connect SolShare to a Wi-Fi network.
Internet LED			
Blue		SolShare has a strong internet connection.	
Yellow		SolShare does not have a strong internet connection, or cannot be communicate with Allume's servers.	Ensure the router has an internet connection. Ensure all required ports are open (consult the Troubleshooting section of Allume's How to set-up/ change Wi-Fi credentials document).

Appendix B: Troubleshooting SolShare Wi-Fi Connection

1. Authentication for network with SSID: “<SSID>” failed”

If “Authentication for network with SSID: “<SSID>” failed” is displayed as shown, or you see a flashing blue Wi-Fi LED on the front of SolShare after following the process above, this means you have entered the incorrect Wi-Fi credentials (i.e. SSID or password have been entered incorrectly) or the Wi-Fi network is not available.

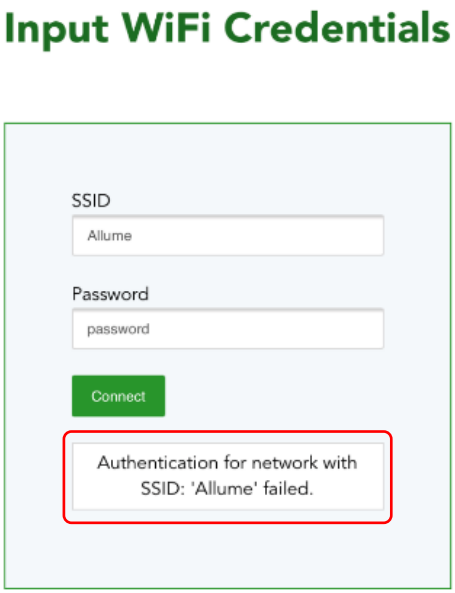

Ensure that the Wi-Fi network meets the key requirements:

- Wi-Fi network frequency = 2.4GHz
- Data Usage = 200MB/month
- IPv4
- Permanent and stable internet connection

Repeat the instructions in the previous section with the correct Wi-Fi credentials/set up.

If the Wi-Fi LED is yellow, follow the process from Step 1 to re-enter SolShare into **Wi-Fi access point mode**.

2. Blue Wi-Fi LED and yellow internet LED

You have connected with the correct credentials to an available Wi-Fi network. However, this network either has no internet connection, or a very poor internet connection.

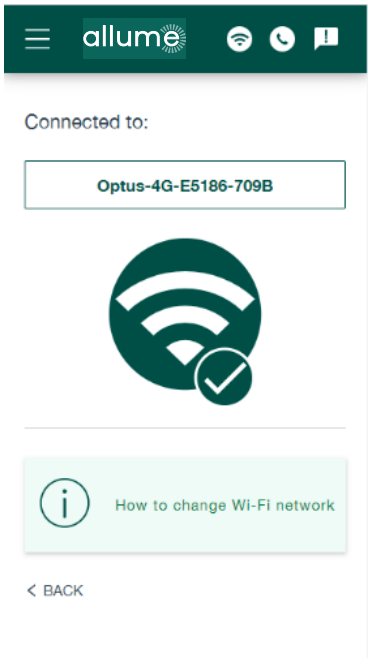

Fix the Wi-Fi network’s internet connection issues (e.g., by restarting the router) – if they are resolved, the Internet LED on the front of SolShare will turn blue.

Ensure the following ports are open in both directions, which may involve contacting the IT network administrator:

- Port 9993 UDP
- Port 1883 TCP
- Port 8883 TCP
- Port 8888 TCP
- Port 80
- Port 443

This manual is intended for installations in **Australia and New Zealand**.
Specifications are subject to changes without advanced notification.

For the most up to date documentation, visit www.allumeenergy.com

Allume Energy
www.allumeenergy.com
info@allumeenergy.com
AUS: +61 3 9427 0005